TYPE10

ICE-DB-T10

Baseboard for COM Express Type 10 Module COM.0 Rev. 2.1, support PICMG EAPI R1.0

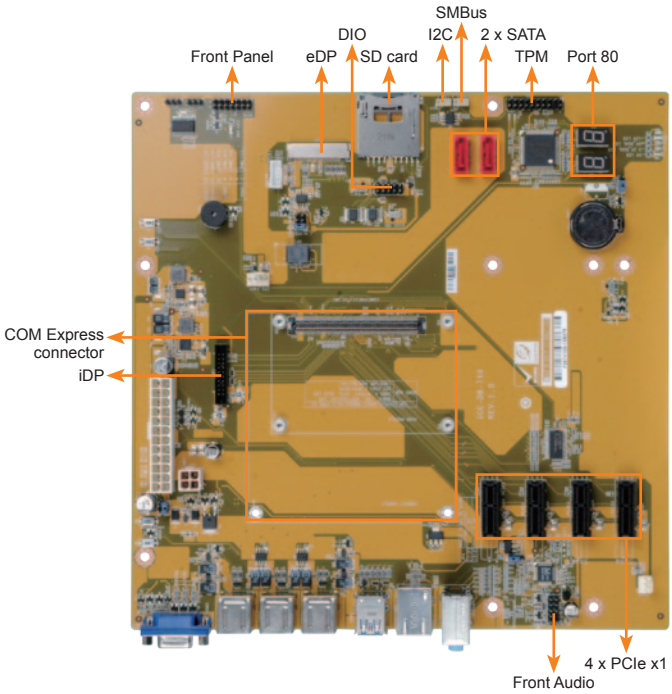

New

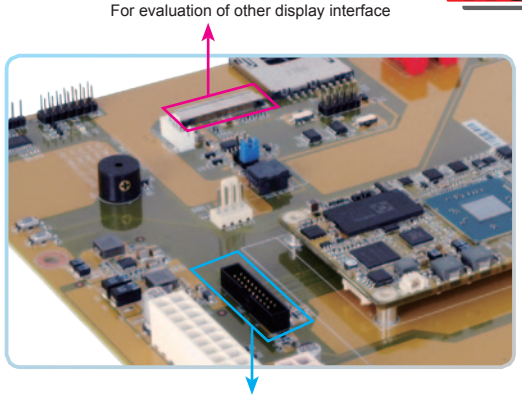

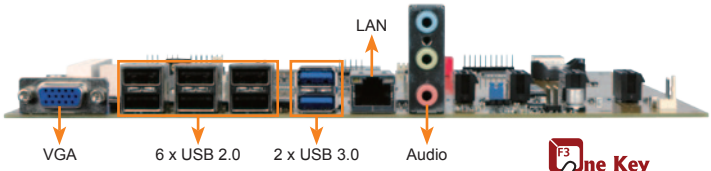

One Key Recovery

Specifications

- Form Factor
  microATX form factor baseboard (244mm x 244mm)
- COM Express type
  Supports COM Express Compact/Mini module using connector pin out Type 10
- Display Interfaces
  1 x eDP
  1 x VGA
  1 x DisplayPort pin-header
- Audio
  Realtek ALC662 HD Audio Codec (Line-in, Line-out, Mic)
- Internal I/O Interface
  4 x PCIe x1 — 1 x LPC
  2 x SATA port — 1 x SD card socket
  2 x RS-232 from COM Express (only TX, RX, GND)
- Rear IO
  1 x VGA — 1 x Audio jack (Line-in, Line-out, Mic)
  2 x USB 3.0 — 6 x USB 2.0
  1 x RJ-45 connector
- Front Audio
  1 x Front audio (2x5 pin)
- TPM
  1 x TPM connector (2x10 pin)
- 80 Port
  1 x 80 port (2x7 segment display)
- Front Panel
  1 x Front_Panel (Power LED, HDD LED, Speaker(Buzzer), Power Button, Reset Button)
- I2C
  1 x I2C (1x4 pin)
- SMBus
  1 x SMBus (1x4 pin)
- Internal Storage
  EEPROM (support EAPI R1.0)
- LPC
  1 x LPC
- Fan Connector
  1 x 4-pin / 1 x 3 pin CPU module fan connector
- Watchdog Timer
  Software programmable, support 1~255 sec. system reset
- Power Supply
  ATX / AT power supply
  24+4 pin
- Operating Temperature
  -20°C ~ 60°C
- Storage Temperature
  -30°C ~ 70°C
- Operating Humidity
  5% ~ 95%, non-condensing
- Dimensions
  243.8 mm x 243.8 mm (9.6" x 9.6")

1.35V DDR3L | Dual Display | USB 3.0 | SATA 3Gb/s | GbE

Features

1. mATX form factor baseboard for COM.0 Rev. 2.1, Pin-out Type 10
2. Support four PCIe x1
3. Support eDP, VGA and iDP
4. Support PICMG EAPI R1.0

Dimensions (Unit: mm)

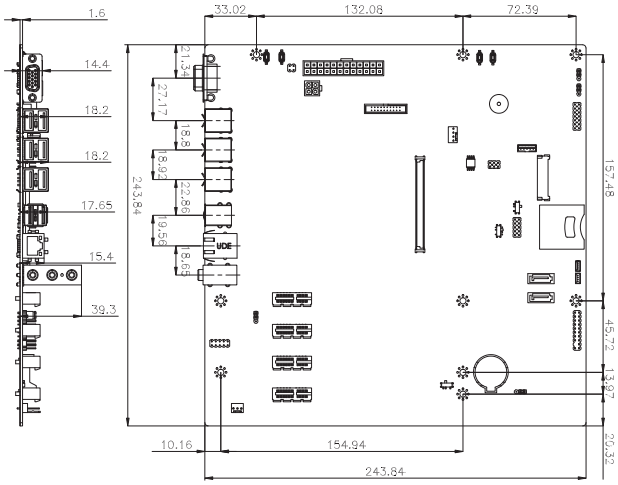

Packing List

1 x COM Express Baseboard	1 x SATA Cable (P/N:32000-062800-RS)
1 x Mini Jumper Pack	1 x QIG

Ordering Information

Part No.	Description
ICE-DB-T10-R10	Baseboard for COM Express Type 10 Module COM.0 Rev. 2.1, support PICMG EAPI R1.0
19800-000082-RS	RS-232/422/485 cable
32102-000100-200-RS	SATA power cable

www.ipc2u.ru www.ipc2u.de www.sovio.com Date:01.06.2016